GaNPower International Inc.

WWW. IGANPOWER.COM
230 -3410 LOUGHEED HWY
VANCOUVER, BC, V5M 2A4 CANADA

GP65R12T4

N-channel 650V 120A GaN Power HEMT in TO247-4 Package

Preliminary Datasheet version: 1.2

Features

BV_{dss}	R_{dson}	I_{ds}	V_{GS}	$V_{GS(TH)}$
650V	12mΩ	120A	-3V to 15V	3.7V

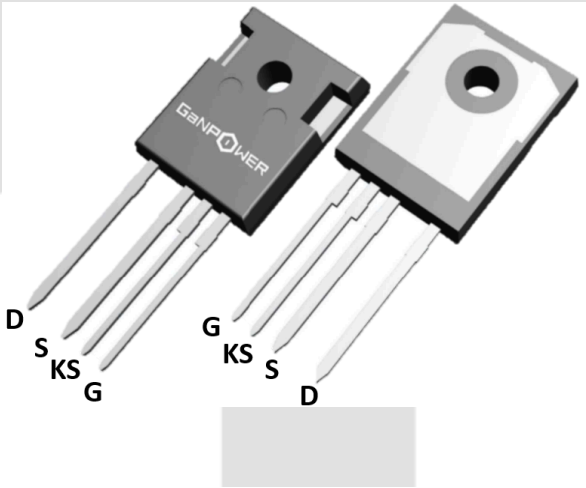

- Ultra-low R_{DSON}
- High dv/dt capability
- Extremely low input capacitance
- Zero Qrr
- Outstanding switching performance
- Low Profile
- **Upgraded P2P GaN with input regulator IC to match input lead and voltage of existing SiC MOSFET**

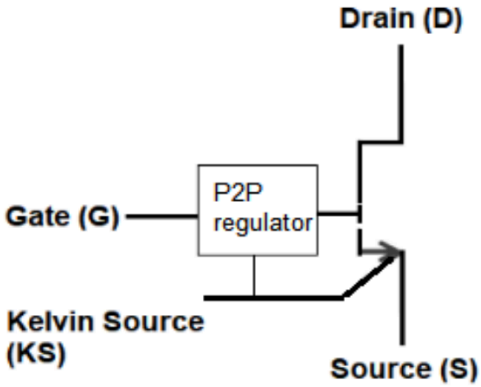

Applications

- Switching Power Applications
- Server and Telecom Power Application
- EV OBC and DC-DC Converters UPS, Inverters, PV

Description

These devices are N-channel 650V Power GaN HEMTs based on proprietary E-mode GaN on silicon technology, integrating an input regulator circuit to match input lead and voltage of existing SiC MOSFET in a pin-to-pin (P2P) fashion. The resulting product has extremely low on-state resistance, very low input capacitance and zero reverse recovery charge, making it especially suitable for applications which require superior power density, ultra-high switching frequency and outstanding efficiency.

GaNPower International Inc.

WWW. IGANPOWER.COM
230 -3410 LOUGHEED HWY
VANCOUVER, BC, V5M 2A4 CANADA

Device Characteristics

Basic Parameters				Test data			
	Parameters		Conditions	Min	Typical	Max	Unit
1	$V_{GS(TH)}$	Zero gate voltage drain current, $T_c = 25^{\circ}C$	$V_{DS} = V_{GS}$ $I_D = 3mA$		3.7	4.0	V
2	BV_{DSS}	Drain-Source breakdown voltage	$V_{GS} = 0V$ $I_D < 20\mu A$		650	800	V
3	I_{DSS}	Zero gate voltage drain current, $T_C = 25^{\circ}C$	$V_{GS} = 0V$ $V_{DS} = 650V$		1.0	6.0	µA
4	I_{GSS}	Gate-Source Leakage @ 25°C	$V_{GS} = 12V$ $V_{DS} = 0V$		35	70	µA
5	R_{DSON}	Static drain-source on resistance, $T_C = 25^{\circ}C$	$V_{GS} = 12V$	12	15	25	mΩ
Switching Performance				**Test data**			
	Parameters		**Conditions**	**Min**	**Typical**	**Max**	**Unit**
1	$t_{D(ON)}$	Turn-on delay time	$V_{DS} = 400V$ $I_D = 92A$ $V_{GS} =$ +12V/-1.3V $R_G = 2\Omega$		9		ns
2	t_R	Rise time			60		ns
3	$t_{D(OFF)}$	Turn-off delay time			39		ns
4	t_F	Fall time			20		ns
5	E_{ON}	Switching energy during turn-on			1062		µJ
6	E_{OFF}	Switching energy during turn-off			254		µJ

GaNPower International Inc.

WWW. IGANPOWER.COM
230 -3410 LOUGHEED HWY
VANCOUVER, BC, V5M 2A4 CANADA

Electrical Performance

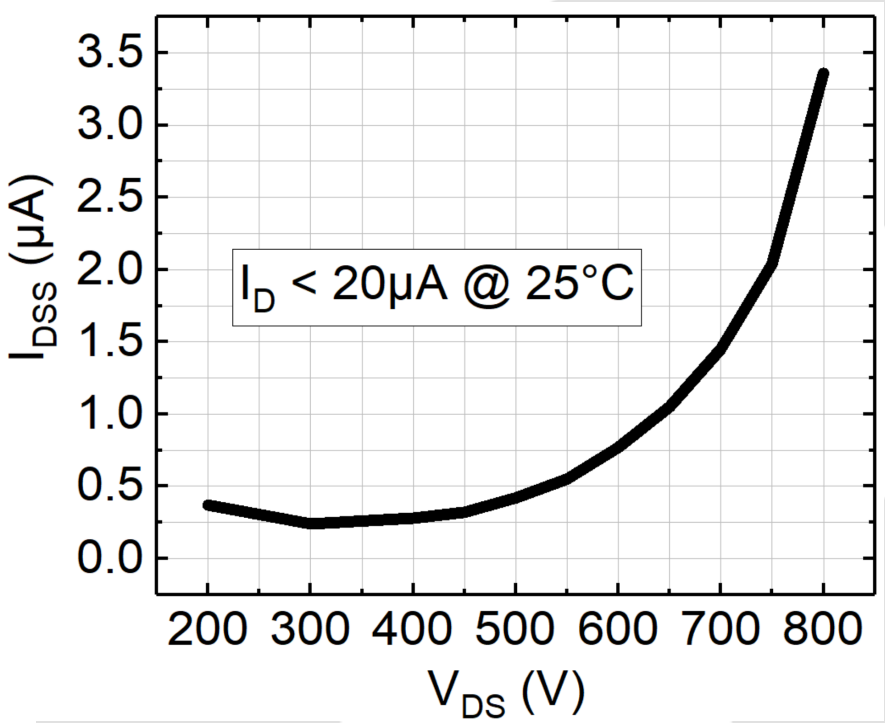

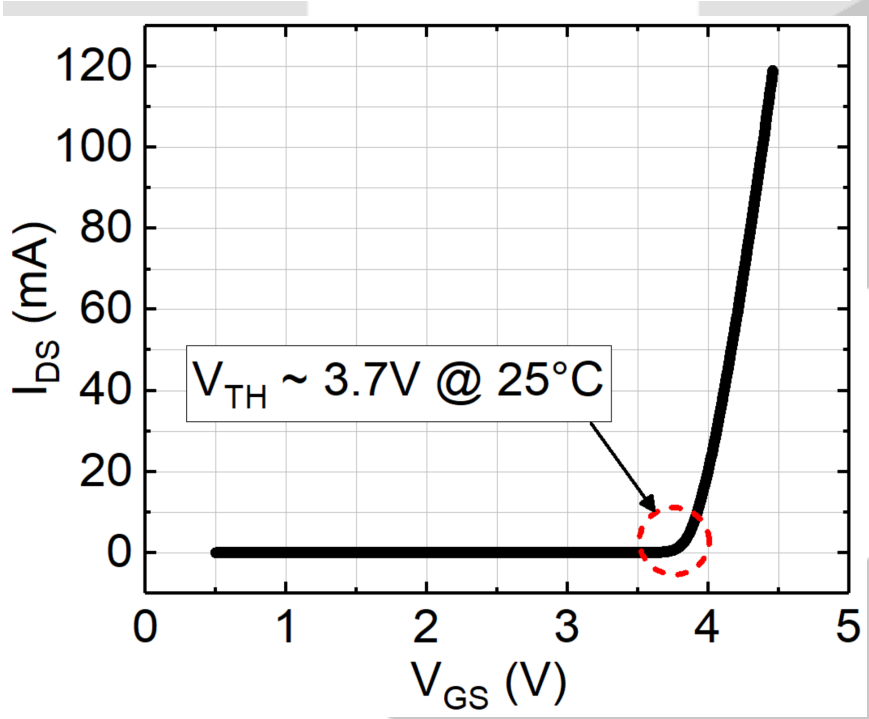

GaNPower International Inc.

WWW. IGANPOWER.COM
230 -3410 LOUGHEED HWY
VANCOUVER, BC, V5M 2A4 CANADA

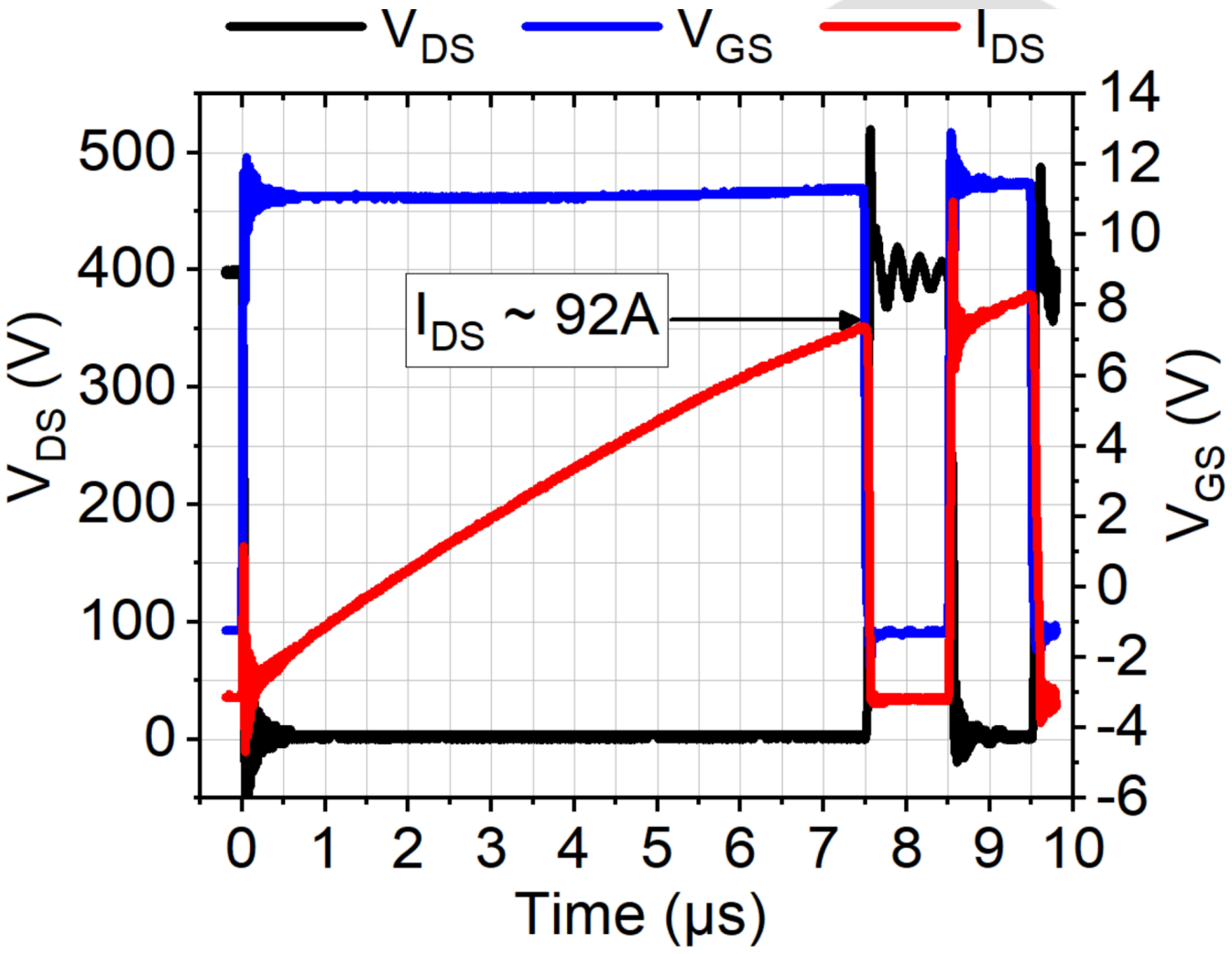

DPT at 25°C: V_{BUS} = 400V, L-load = 21μH

GaNPower International Inc.

WWW. IGANPOWER.COM
230 -3410 LOUGHEED HWY
VANCOUVER, BC, V5M 2A4 CANADA

Package Information

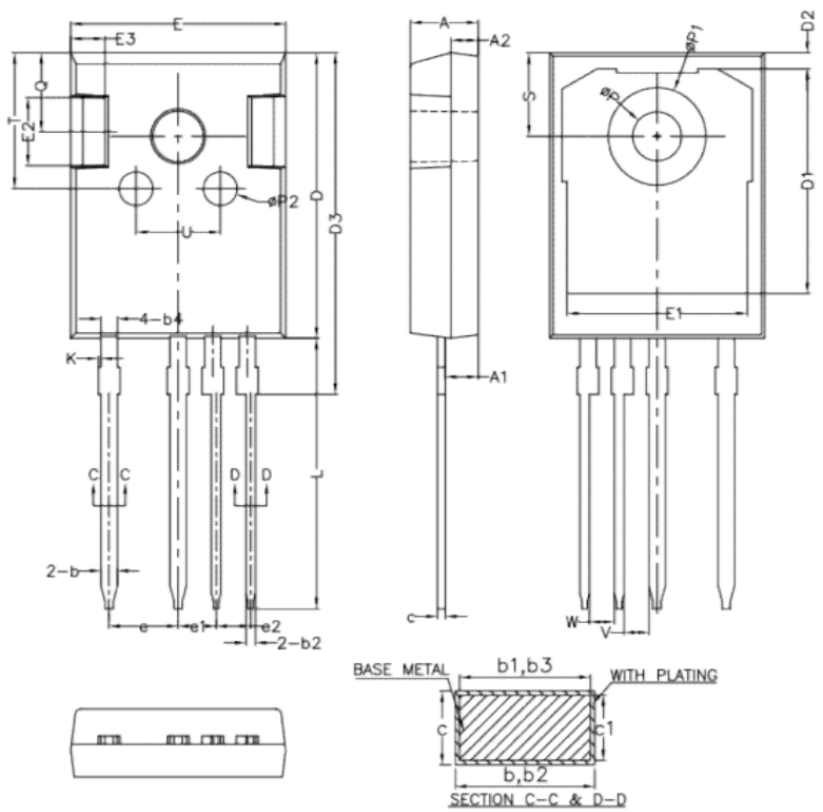

COMMON DIMENSIONS
(UNITS OF MEASURE=MILLIMETER)

SYMBOL	MIN	NOM	MAX
A	4.90	5.00	5.10
A1	2.31	2.41	2.51
A2	1.90	2.00	2.10
b	1.16	–	1.29
b1	1.15	1.20	1.25
b2	0.66	–	0.79
b3	0.65	0.70	0.75
b4	1.16	–	1.29
c	0.59	–	0.66
c1	0.58	0.60	0.62
D	20.90	21.00	21.10
D1	16.25	16.55	16.85
D2	1.05	1.20	1.35
D3	24.97	25.12	25.27
E	15.70	15.80	15.90
E1	13.10	13.30	13.50
E2	4.90	5.00	5.10
E3	2.40	2.50	2.60
e	4.98	5.08	5.18
e1	2.69	2.79	2.89
e2	2.44	2.54	2.64
K	0	–	0.20
L	19.80	19.92	20.10
P	3.50	3.60	3.70
P1	–	–	7.40
P2	2.40	2.50	2.60
Q	5.60	–	6.00
S	6.00	6.15	6.30
T	9.80	–	10.20
U	6.00	–	6.40
V	1.44	1.84	2.24
W	1.44	1.84	2.24

NOTES:
1.ALL DIMENSIONS DO NOT INCLUDE MOLD FLASH OR PROTRUSIONS.
2.EJECTION MARK DEPTH $0.10^{+0.15}_{-0.05}$.

GaNPower International Inc.

WWW. IGANPOWER.COM
230 -3410 LOUGHEED HWY
VANCOUVER, BC, V5M 2A4 CANADA

Further Information

Important Notice-Unless expressly approved in writing by an authorized representative of GaNPower, GaNPower components are not designed, authorized or warranted for use in lifesaving, life sustaining, military, aircraft, or space applications, nor in products or systems where failure or malfunction may result in personal injury, death, or property or environmental damage. The information given in this document shall not in any event be regarded as a guarantee of performance. GaNPower hereby disclaims any or all warranties and liabilities of any kind, including but not limited to warranties of non-infringement of intellectual property rights. All other brand and product names are trademarks or registered trademarks of their respective owners. Information provided herein is intended as a guide only and is subject to change without notice. The information contained herein or any use of such information does not grant, explicitly, or implicitly, to any party any patent rights, licenses, or any other intellectual property rights. All rights reserved.

Data Source– Data here are based on recent tests but all parameters may not be up to date. Actual final test data from packaging production are available for selected customers upon request.